IBM1072-xxx-nn
Product Specifications

IBM1072 SpacePole® configuration integrates the SurePoint 15" 4820 screens and Customer Displays. The IBM1072 offers a range of flexibility with a choice of arm lengths when ordering your configuration. Additionally the IBM1072 offers as standard tilt, rotation and cable management.

www.spacepole.com

Technical Specifications

Standard Pole Heights <xxx>	230mm
	310mm
Customer display adapter	√
Cable Management	Internal
Screen Rotation	60°
Screen Tilt (forward)	√
Screen Tilt (backward)	√
Footprint	Ø97mm
Pole Diameter	Ø44.5mm
Fasteners & Fixings	Self tapping screws
Colour <nn>	04-Pearl
	05-Iron Grey
Warranty	5 Years

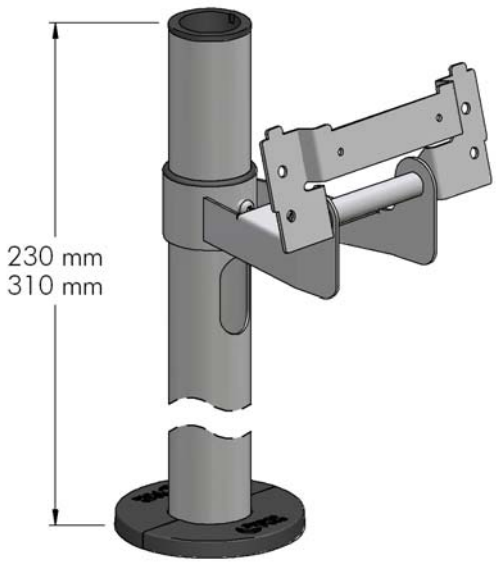

Configure Your Part Number - IBM1072-xxx-nn

IBM1072-230-nn
IBM1072-310-nn

nn = Colour Code
-04 - Pearl
-05 - Iron Grey

Notes:

- The IBM1072 can be installed either on top of the counter or from the underside, all fixings for both options are supplied as standard.
- **These mounting solutions have been designed for the 15" SurePoint 4820 screen only. For the 12" SurePoint 4820 screen, please use IBM0072.**
- When using SpacePole® Stands for the 4820 screen, the rear cable cover Part No. 257104 / RPQ 8Q1871 must be ordered separately.

ErgonomicSolutions
IBM
Retail Store Solutions
Strategic Supplier Award
2004
ergonomic solutions

Vers. 1.0

Due to continuous product development Ergonomic Solutions reserves the right to change product specification without notice.
© Copyright 2005. All rights reserved. Designs, trademarks and brands are the property of Ergonomic Solutions.